FAIRCHILD
SEMICONDUCTOR®

July 2007

IGBT®

FGL40N120AN
1200V NPT IGBT

Features

- High speed switching
- Low saturation voltage : $V_{CE(sat)}$ = 2.6 V @ I_C = 40A
- High input impedance

Applications

Induction Heating, UPS, AC & DC motor controls and general purpose inverters.

Description

Employing NPT technology, Fairchild's AN series of IGBTs provides low conduction and switching losses. The AN series offers an solution for application such as induction heating (IH), motor control, general purpose inverters and uninterruptible power supplies (UPS).

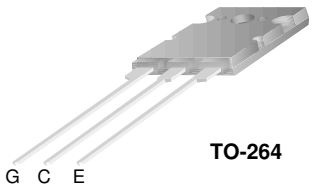

TO-264

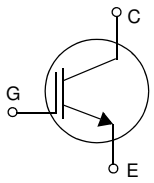

Absolute Maximum Ratings

Symbol	Parameter		FGL40N120AN	Units
V_{CES}	Collector-Emitter Voltage		1200	V
V_{GES}	Gate-Emitter Voltage		±25	V
I_C	Collector Current	@T_C = 25°C	64	A
	Collector Current	@T_C = 100°C	40	A
$I_{CM(1)}$	Pulsed Collector Current		160	A
P_D	Maximum Power Dissipation	@T_C = 25°C	500	W
	Maximum Power Dissipation	@T_C = 100°C	200	W
SCWT	Short Circuit Withstand Time, V_{CE} = 600V, V_{GE} = 15V, T_C = 125°C		10	μs
T_J	Operating Junction Temperature		-55 to +150	°C
T_{STG}	Storage Temperature Range		-55 to +150	°C
T_L	Maximum Lead Temp. for Soldering Purposes, 1/8" from Case for 5 seconds		300	°C

Notes:

(1) Pulse width limited by max. junction temperature

Thermal Characteristics

Symbol	Parameter	Typ.	Max.	Units
$R_{\theta JC}$(IGBT)	Thermal Resistance, Junction-to-Case	--	0.25	°C/W
$R_{\theta JA}$	Thermal Resistance, Junction-to-Ambient	--	25	°C/W

©2007 Fairchild Semiconductor Corporation

Package Marking and Ordering Information

Device Marking	Device	Package	Reel Size	Tape Width	Quantity
FGL40N120AN	FGL40N120AN	TO-264	-	-	25

Electrical Characteristics of the IGBT T_C = 25°C unless otherwise noted

Symbol	Parameter	Conditions	Min.	Typ.	Max.	Units
Off Characteristics						
BV_{CES}	Collector-Emitter Breakdown Voltage	V_{GE} = 0V, I_C = 1mA	1200	--	--	V
$BV_{CES}/\Delta T_J$	Temperature Coefficient of Breakdown Voltage	V_{GE} = 0V, I_C = 1mA	--	0.6	--	V/°C
I_{CES}	Collector Cut-Off Current	V_{CE} = V_{CES}, V_{GE} = 0V	--	--	1	mA
I_{GES}	G-E Leakage Current	V_{GE} = V_{GES}, V_{CE} = 0V	--	--	±250	nA
On Characteristics						
$V_{GE(th)}$	G-E Threshold Voltage	I_C = 250μA, V_{CE} = V_{GE}	3.5	5.5	7.5	V
$V_{CE(sat)}$	Collector to Emitter Saturation Voltage	I_C = 40A, V_{GE} = 15V	--	2.6	3.2	V
		I_C = 40A, V_{GE} = 15V, T_C = 125°C	--	2.9	--	V
		I_C = 64A, V_{GE} = 15V	--	3.15	--	V
Dynamic Characteristics						
C_{ies}	Input Capacitance	V_{CE} = 30V, V_{GE} = 0V f = 1MHz	--	3200	--	pF
C_{oes}	Output Capacitance		--	370	--	pF
c_{res}	Reverse Transfer Capacitance		--	125	--	pF
Switching Characteristics						
$t_{d(on)}$	Turn-On Delay Time	V_{CC} = 600V, I_C = 40A, R_G = 5Ω, V_{GE} = 15V, Inductive Load, T_C = 25°C	--	15	--	ns
t_r	Rise Time		--	20	--	ns
$t_{d(off)}$	Turn-Off Delay Time		--	110	--	ns
t_f	Fall Time		--	40	80	ns
E_{on}	Turn-On Switching Loss		--	2.3	3.45	mJ
E_{off}	Turn-Off Switching Loss		--	1.1	1.65	mJ
E_{ts}	Total Switching Loss		--	3.4	5.1	mJ
$t_{d(on)}$	Turn-On Delay Time	V_{CC} = 600V, I_C = 40A, R_G = 5Ω, V_{GE} = 15V, Inductive Load, T_C = 125°C	--	20	--	ns
t_r	Rise Time		--	25	--	ns
$t_{d(off)}$	Turn-Off Delay Time		--	120	--	ns
t_f	Fall Time		--	45	--	ns
E_{on}	Turn-On Switching Loss		--	2.5	--	mJ
E_{off}	Turn-Off Switching Loss		--	1.8	--	mJ
E_{ts}	Total Switching Loss		--	4.3	--	mJ
Q_g	Total Gate charge	V_{CE} = 600V, I_C = 40A, V_{GE} = 15V	--	220	330	nC
Q_{ge}	Gate-Emitter Charge		--	25	38	nC
Q_{gc}	Gate-Collector Charge		--	130	195	nC

Typical Performance Characteristics

Figure 1. Typical Output Characteristics

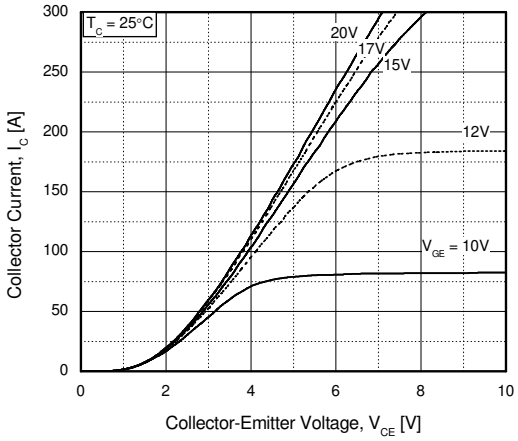

Figure 2. Typical Saturation Voltage Characteristics

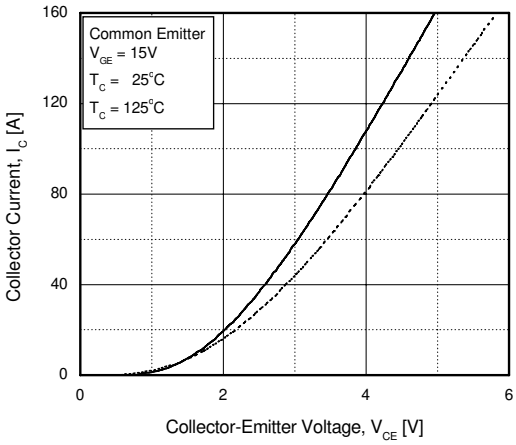

Figure 3. Saturation Voltage vs. Case Temperature at Variant Current Level

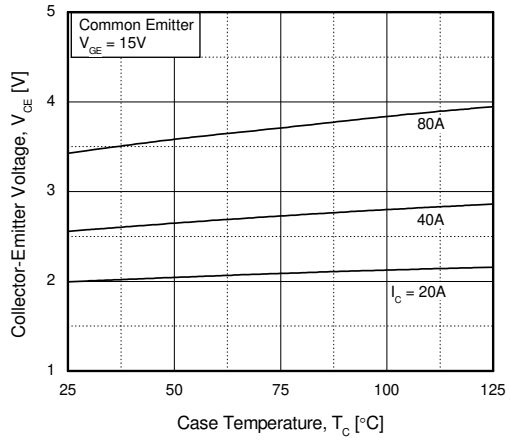

Figure 4. Load Current vs. Frequency

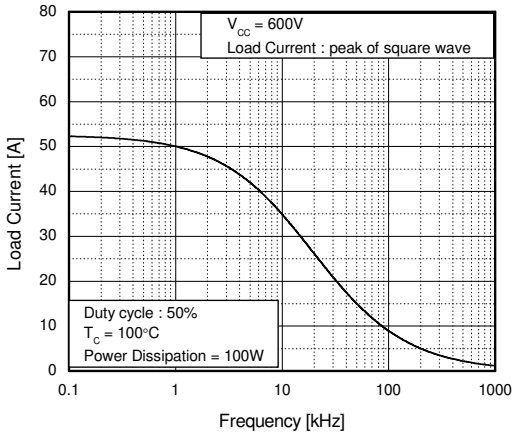

Figure 5. Saturation Voltage vs. V_{GE}

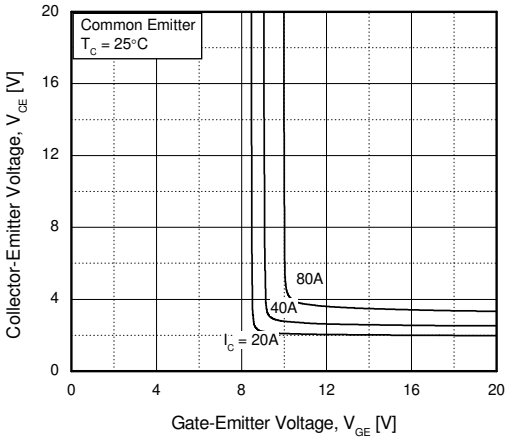

Figure 6. Saturation Voltage vs. V_{GE}

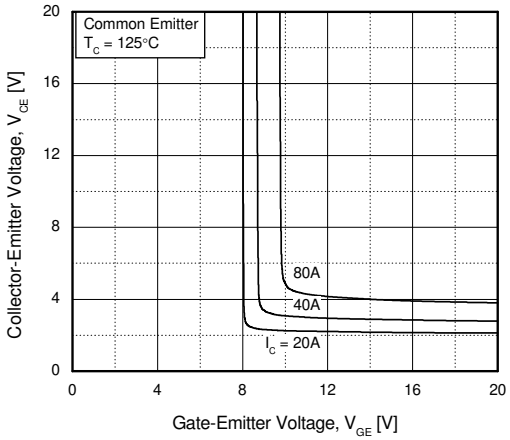

Typical Performance Characteristics (Continued)

Figure 7. Capacitance Characteristics

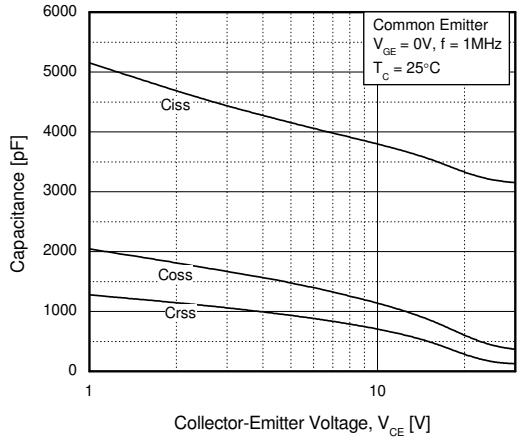

Figure 8. Turn-On Characteristics vs. Gate Resistance

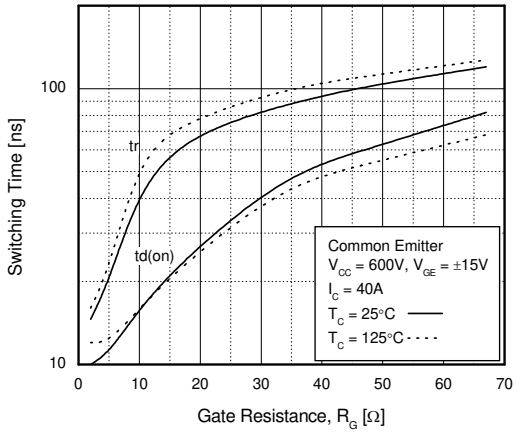

Figure 9. Turn-Off Characteristics vs. Gate Resistance

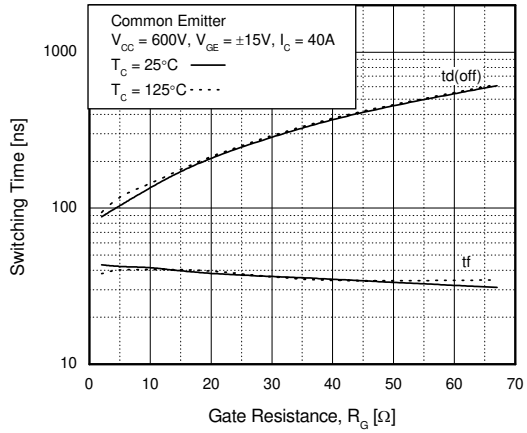

Figure 10. Switching Loss vs. Gate Resistance

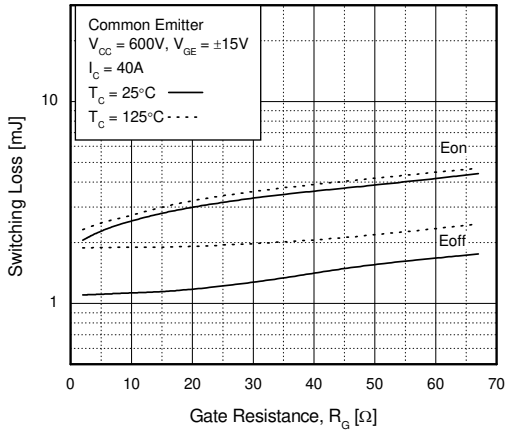

Figure 11. Turn-On Characteristics vs. Collector Current

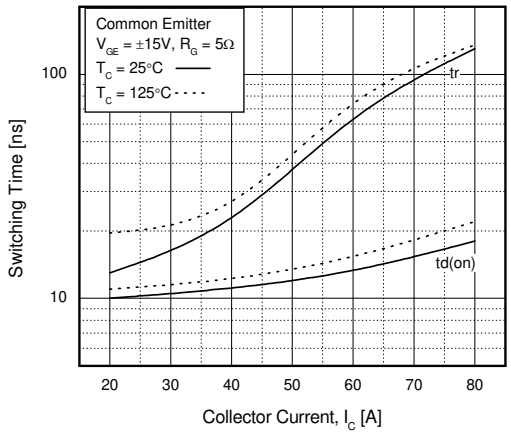

Figure 12. Turn-Off Characteristics vs. Collector Current

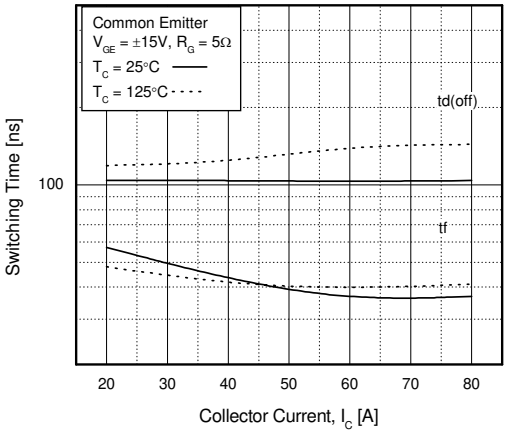

Typical Performance Characteristics (Continued)

Figure 13. Switching Loss vs. Collector Current

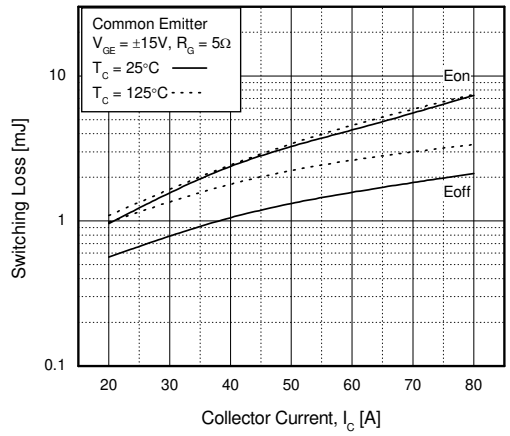

Figure 14. Gate Charge Characteristics

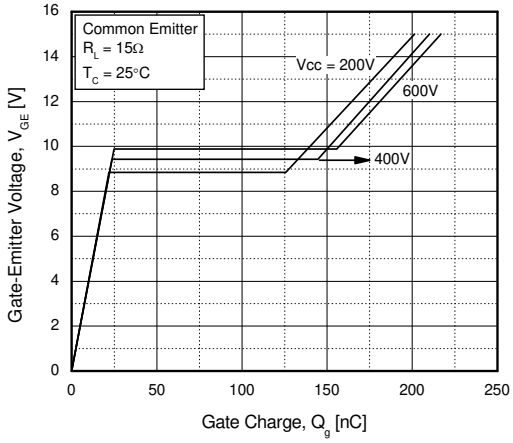

Figure 15. SOA Characteristics

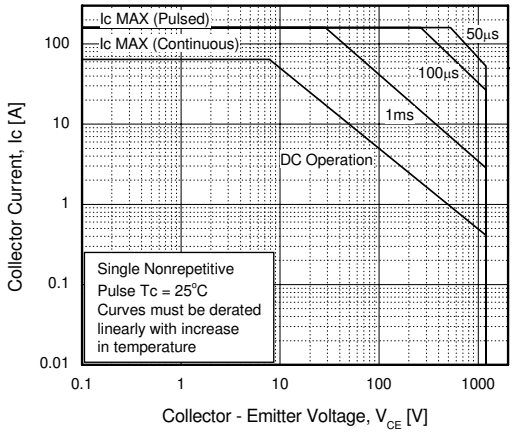

Figure 16. Turn-Off SOA

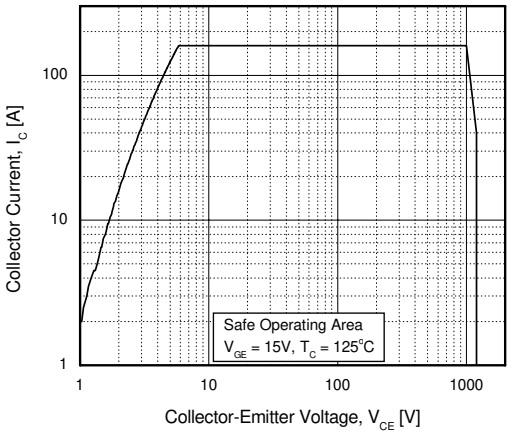

Figure 17. Transient Thermal Impedance of IGBT

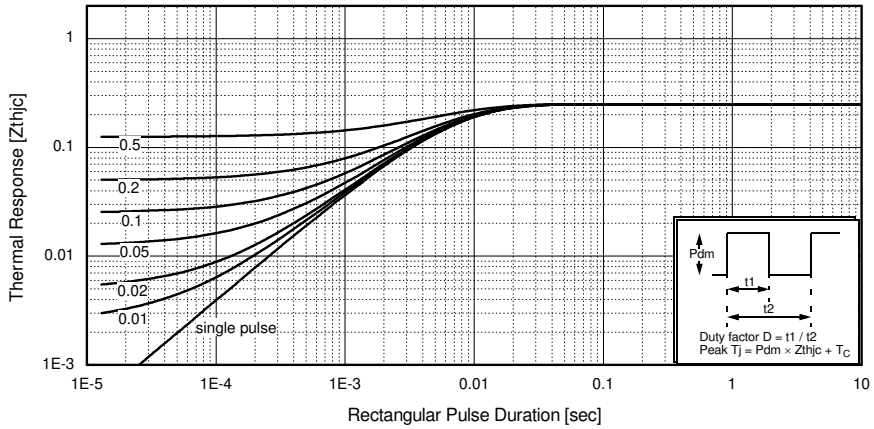

Mechanical Dimensions

TO-264

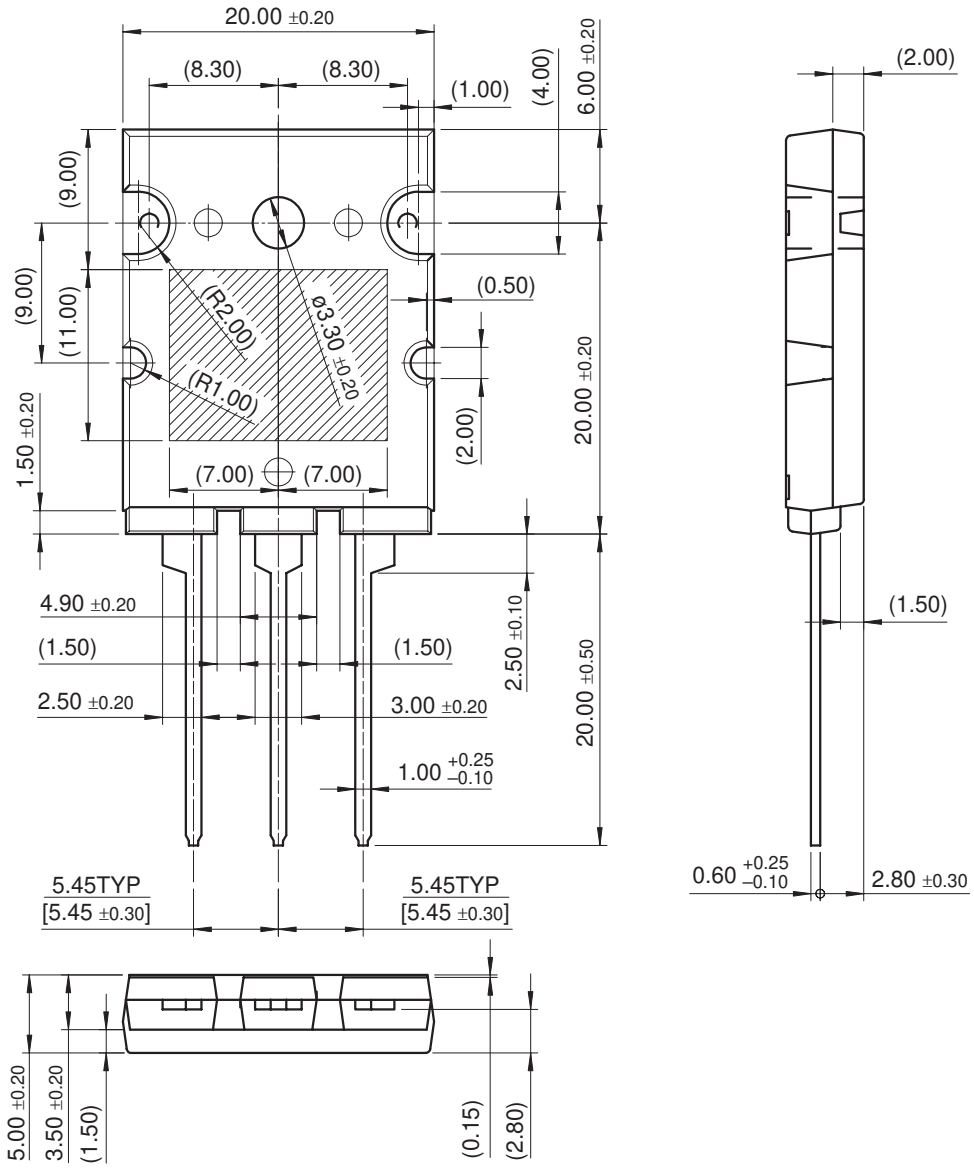

Dimensions in Millimeters

FAIRCHILD
SEMICONDUCTOR®

TRADEMARKS

The following are registered and unregistered trademarks and service marks Fairchild Semiconductor owns or is authorized to use and is not intended to be an exhaustive list of all such trademarks.

ACEx®
Build it Now™
CorePLUS™
CROSSVOLT™
CTL™
Current Transfer Logic™
EcoSPARK®
FACT Quiet Series™
FACT®
FAST®
FastvCore™
FPS™
FRFET®
Global Power Resource℠
Green FPS™
Green FPS™ e-Series™
GTO™
i-Lo™
IntelliMAX™
ISOPLANAR™
MegaBuck™
MICROCOUPLER™
MicroFET™
MicroPak™
Motion-SPM™
OPTOLOGIC®
OPTOPLANAR®
PDP-SPM™
Power220®
Power247®
POWEREDGE®
Power-SPM™
PowerTrench®
Programmable Active Droop™
QFET®
QS™
QT Optoelectronics™
Quiet Series™
RapidConfigure™
SMART START™
SPM®
STEALTH™
SuperFET™
SuperSOT™-3
SuperSOT™-6
SuperSOT™-8
SyncFET™
The Power Franchise®
™
TinyBoost™
TinyBuck™
TinyLogic®
TINYOPTO™
TinyPower™
TinyPWM™
TinyWire™
µSerDes™
UHC®
UniFET™
VCX™

DISCLAIMER

FAIRCHILD SEMICONDUCTOR RESERVES THE RIGHT TO MAKE CHANGES WITHOUT FURTHER NOTICE TO ANY PRODUCTS HEREIN TO IMPROVE RELIABILITY, FUNCTION, OR DESIGN. FAIRCHILD DOES NOT ASSUME ANY LIABILITY ARISING OUT OF THE APPLICATION OR USE OF ANY PRODUCT OR CIRCUIT DESCRIBED HEREIN; NEITHER DOES IT CONVEY ANY LICENSE UNDER ITS PATENT RIGHTS, NOR THE RIGHTS OF OTHERS. THESE SPECIFICATIONS DO NOT EXPAND THE TERMS OF FAIRCHILD'S WORLDWIDE TERMS AND CONDITIONS, SPECIFICALLY THE WARRANTY THEREIN, WHICH COVERS THESE PRODUCTS.

LIFE SUPPORT POLICY

FAIRCHILD'S PRODUCTS ARE NOT AUTHORIZED FOR USE AS CRITICAL COMPONENTS IN LIFE SUPPORT DEVICES OR SYSTEMS WITHOUT THE EXPRESS WRITTEN APPROVAL OF FAIRCHILD SEMICONDUCTOR CORPORATION.

As used herein:

1. Life support devices or systems are devices or systems which, (a) are intended for surgical implant into the body or (b) support or sustain life, and (c) whose failure to perform when properly used in accordance with instructions for use provided in the labeling, can be reasonably expected to result in a significant injury of the user.
2. A critical component in any component of a life support, device, or system whose failure to perform can be reasonably expected to cause the failure of the life support device or system, or to affect its safety or effectiveness.

PRODUCT STATUS DEFINITIONS

Definition of Terms

Datasheet Identification	Product Status	Definition
Advance Information	Formative or In Design	This datasheet contains the design specifications for product development. Specifications may change in any manner without notice.
Preliminary	First Production	This datasheet contains preliminary data; supplementary data will be published at a later date. Fairchild Semiconductor reserves the right to make changes at any time without notice to improve design.
No Identification Needed	Full Production	This datasheet contains final specifications. Fairchild Semiconductor reserves the right to make changes at any time without notice to improve design.
Obsolete	Not In Production	This datasheet contains specifications on a product that has been discontinued by Fairchild Semiconductor. The datasheet is printed for reference information only.

Rev. I29

© 2007 Fairchild Semiconductor Corporation